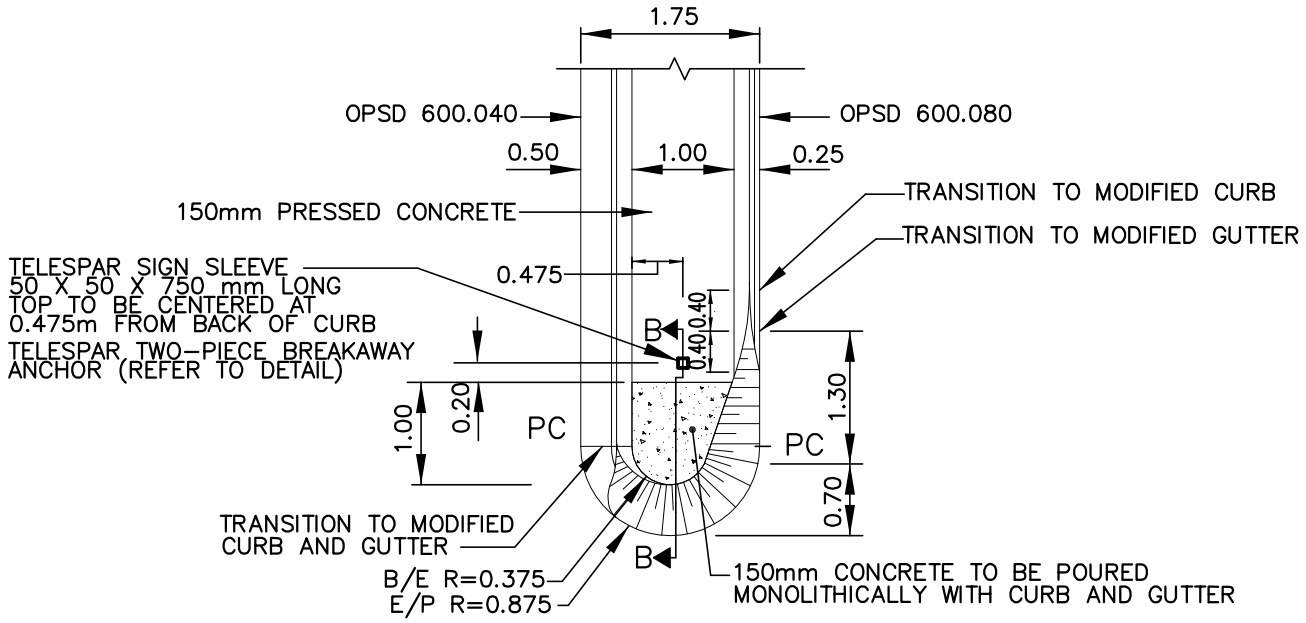

SMALL ISLAND

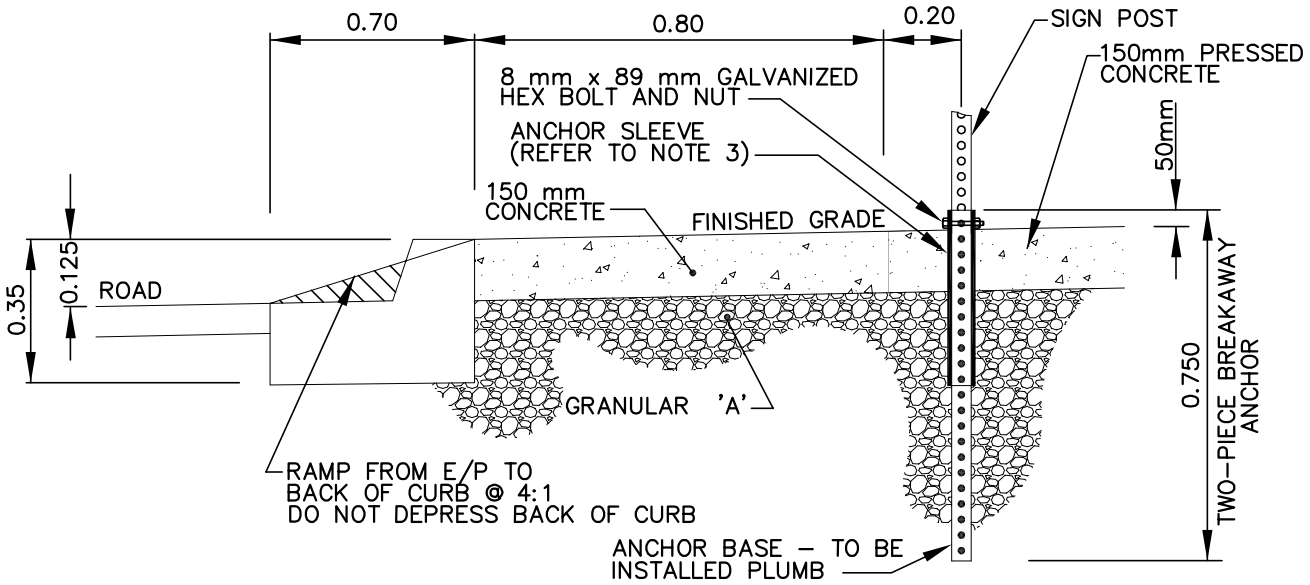

SECTION B–B

NOTES:

1. DO NOT RAMP BULLNOSE AT SIGNALIZED END OF MEDIAN ISLAND.
2. FOR SIGNALIZED END DETAIL REFER TO S–502.
3. FOR POURED CONCRETE ISLAND, TELESPAR ANCHOR ASSEMBLY TO BE INSTALLED USING 56mm x 450mm SOLID ANCHOR SLEEVE.
4. ALL PERMANENT SIGNAGE TO BE SUPPLIED BY THE REGION OF DURHAM.

ALL DIMENSIONS IN MILLIMETRES EXCEPT WHERE NOTED

THE CORPORATION OF THE TOWN OF WHITBY		PUBLIC WORKS DEPARTMENT	
CHECKED		1.75m WIDE ISLAND RAMP END DETAIL	DWG. DATE: MAY 2006
APPROVED			REVISION NO: 2
			REVISION DATE: JULY 2011
SCALE:	N.T.S.		DWG No. 412.20